BIO-30-022B // Automatic Built-in Fireplace 150 cm

Technical Specifications

Fireplace Type	Automatic built-in bioethanol fireplace
Fuel	Bioethanol, max. 97.5% alcohol
Weight	35 kg.
Materials	Stainless Steel, Tempered Glass
Size	Height: 700 / Width: 1500 / Depth: 360.40 mm.
Colour	Black
Burner type	Automatic
Capacity	5.7 liter
Adjustable flame	No
Burn time	Up to 7 hours
Requires electricity	Yes
Heat effect	6.20 kW/h

Pictures

Technical Drawings

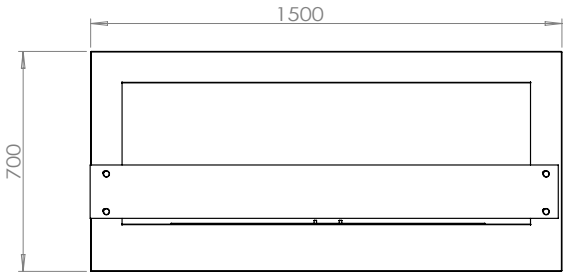

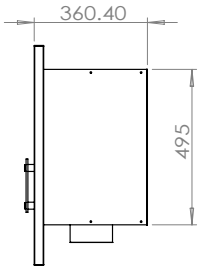

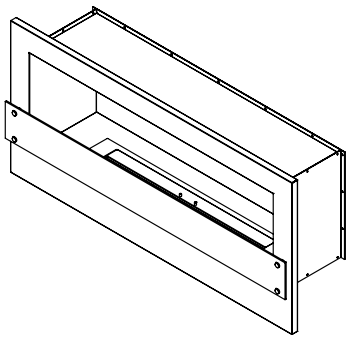

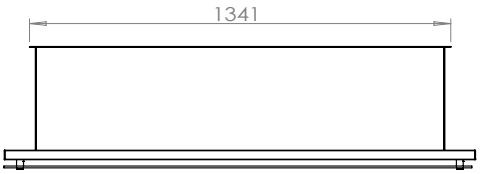

www.biofireplacegroup.com

Date of publication: 08/10-2018